servo DRIVE

contraves

SDA Series
Transistor-drive for DC servo motors

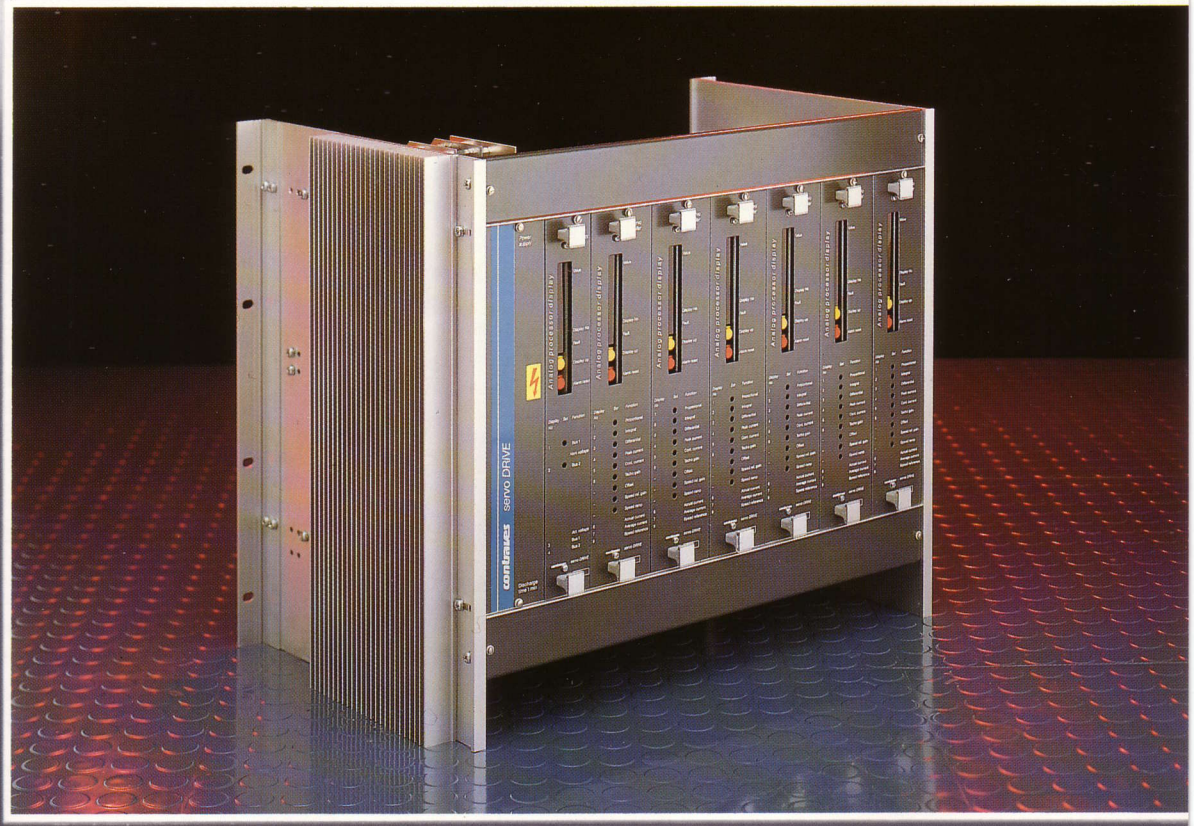

Description and technical data

Brief description

The servo controller of the SDA series is a variable speed drive for DC servo motors.

A one-axis basic configuration consists of a power supply, a controller board and a shunt regulator board.

The boards are in a double eurocard format.

Up to 8 axis can be fitted in the same rack with only one power supply and one shunt regulator board.

An integrally mounted analog processor allows the adjustment and the display of all the required parameters.

Each board has an easily read LED display for different operating status, monitoring functions and fault indications.

For less demanding applications, a special speed loop configuration can be used that needs no tachometer feedback.

Each rack may have 2 independent voltage busses to supply 2 different kinds of motor.

Special features

- Fully transistorized PWM control loop using a tachometer as the feedback device
- Speed loop control capability without external feedback device
- Opto-coupled inputs for drive enable, travel limit and PID/P speed loop selection
- Output relay for drive-ready signal
- Protection and monitoring features:
  - adjustable continuous current limit
  - adjustable peak current limit
  - tachometer signal failure
  - drive over temperature
  - under and over voltage protection
  - short circuit protection
  - automatic power limitation above 45 °C ambient temperature (2%/°K)

Technical data

Max. main supply voltage	3 x 140 V, 50/60 Hz
Power supply output current	30, 60 or 120 A
Max. output voltage	190 V DC
Max. reference voltage	±10 V
Reference command integrator	0.1 to 1.6 s
Max. tachometer voltage	100 V
PWM frequency	18 kHz
Control range	> 1:15 000
Control accuracy	< 0.5% of $n_{max.}$
Output disposable	+15/–15 V (max. 20 mA)
Operating temperature range	45 °C 45–65 °C with reduced power: 2%/°K

Ordering example

SDA 23 B4 P6 H6E X*

- X*: Additional motherboard:
  - X ... MBE 200 (for controller)
  - Y ... MBS 200 (for shunt regulator)
- H6E: Controller: Number and type
  - E... SDA 2
  - F... SDA 5
  - G... SDA 10
  - H... SDA 20
  - I ... SDA 30
- P6: Power supply:
  - P1... SDA-P120 = 120 A
  - P3... SDA-P30 = 30 A
  - P6... SDA-P60 = 60 A
  - 2P... SDA-2P60 = 2 x 60 A
- B4: Shunt regulator:
  - B1... SDA-B1
  - B2... SDA-B2
  - B3... SDA-B3
  - B4... SDA-B4**
  - B5... SDA-B5**
  - B6... SDA-B6**
- 23: Rack type (300 mm deep):
  - 8... SD 8.0" (1 axis)
  - 10... SD 10.2" (2 axes)
  - 12... SD 12.4" (3 axes)
  - 14... SD 14.6" (4 axes)
  - 16... SD 16.8" (5 axes)
  - 19... SD 19.0" (6 axes)
  - 23... SD 23.4" (8 axes)
- SDA: Servo DRIVE controller SDA

*Assembled spare place for future optional servoamplifier or brake module

Controller board	*Cont. output current I_n [A]*	*Peak current I max. [A]*	*Cont. output power P_n [kW]*	*Min. armature induction L min. [mH]*
SDA 2	2	4	0.4	11.6
SDA 5	5	10	1	4.7
SDA 10	10	20	1.9	2.3
SDA 20	20	40	3.8	1.2
SDA 30	30	60	5.7	0.8

Shunt regulator	*Max. bus voltage [V]*	*Max. dissipation power [W]*	*Max. dissipation energy [kJ]*
SDA-B1	300	200	10
SDA-B2	2x300	2x200	2x10
SDA-B3	300	400	20
SDA-B4**	300	200	10
SDA-B5**	2x300	2x200	2x10
SDA-B6**	300	400	20

** without display

Analog processor

An analog processor is used to set and display
- PID control loop parameters
- continuous and peak current limits
- tachometer scaling

to display
- instantaneous and average currents
- command input

to set
- reference command integrator
- command scaling
- command offset

Controller board: status displays

Display No.	*Description*	*Units*
1	Proportional gain K_P	–
2	Integral time constant K_I	–
3	Derivative time constant K_P	–
4	Peak current limit	[A]
5	Continuous current limit	[A]
6	Instantaneous current	[A]
7	Average current (30 s)	[A]
8	Tachometer voltage	[V]
9	Reference command input	[V]

Shunt regulator board: status displays

Display No.	*Description*	*Value*
1	Bus 1: voltage reference	[V]
2	Bus 2: voltage reference	[V]
3	Bus 1: actual voltage	[V]
4	Bus 2: actual voltage	[V]

Controller board: fault displays

Fault No.	*Description*	*Resulting action*
1	No drive-enable input	Standby and fault message
2	In current limit	None
3	Over current	Standby and fault message
4	Tachometer failure	Standby and fault message
5	Controller overtemperature	Standby and fault message
6	Over/under voltage, short circuit	Standby and fault message
7	Shunt regulator board alarm	Standby and fault message
0	servo DRIVE ready	Drive-ready message

Shunt regulator board: fault displays

Fault No.	*Description*
1	Bus 1: regulator on
2	Bus 2: regulator on
3	Bus 1 under/over voltage
4	Bus 2 under/over voltage
5	Short circuit

Controller board

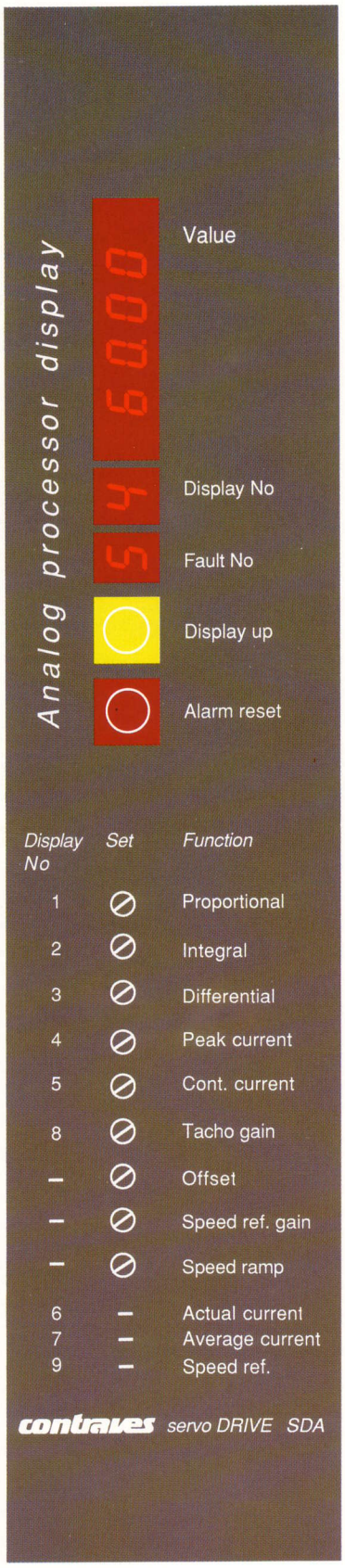

Shunt regulator board

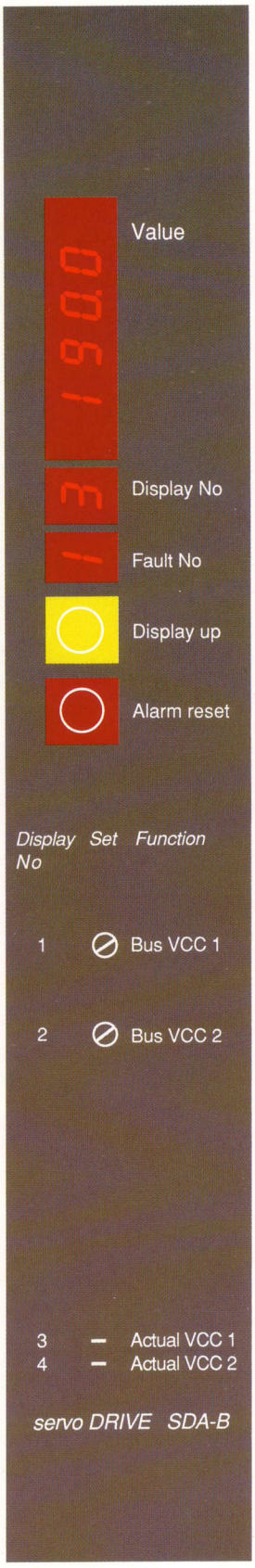

Dimensions

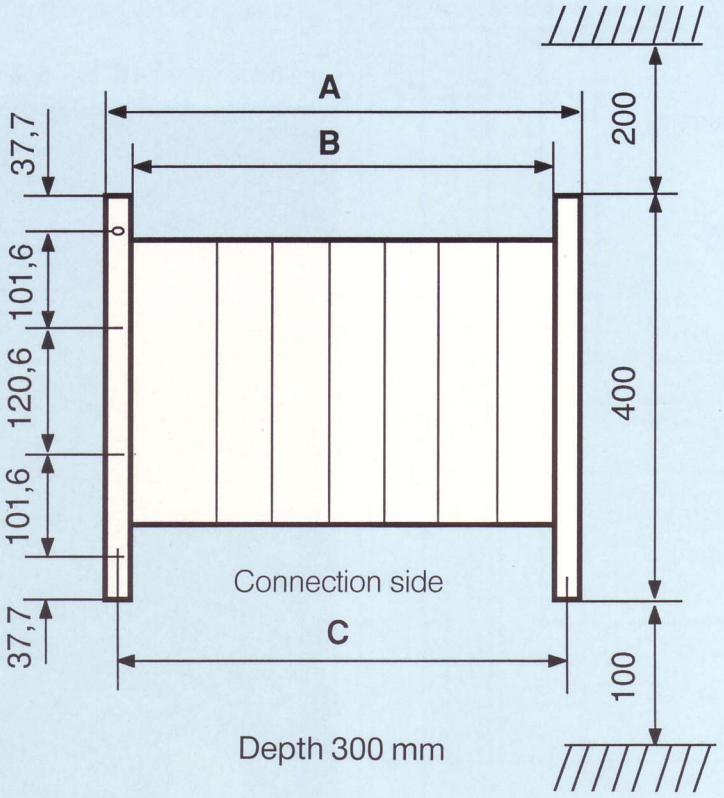

No. of axis	A		B	C	Fans	Weight
	inch	mm	mm	mm		kg
1	8	203	147	186	1	2
2	10.2	259	203	241	1	4
3	12.4	315	259	297	2	5
4	14.6	371	315	353	2	6
5	16.8	427	371	409	3	7
6	19	483	427	465	3	8
8	23.4	594	538	577	4	10

Contraves Antriebstechnik AG, Pumpwerkstrasse 23, CH-8105 Regensdorf, Tel. 01/840 58 13, Telex 825 829, Fax 01/840 58 30
Contraves GmbH, Bereich Antriebstechnik, Eschborner Landstr. 42-50, 6000 Frankfurt/M 90, Tel. 069/789920, Telex 416 416, Fax 069/78 992 113
Contraves Industrial Products Ltd, Electronic Drive Systems, Mansion Close, Moulton Park Industrial Estate, GB-Northampton/NN3 1RU, Tel. 0604/49 32 01, Telex 312 471, Fax 0604/493 515
Prodotti Industriali Contraves S.p.A., Via Giovanni Bovio 6, I-20159 Milano, Tel. 02/688 62 31, Telex 333 259, Fax 02/688 69 45
Codix K.K., 2and Floor Takeshiba Bldg., 1-9-15, Kaigan, Minato-Ku, Tokyo, Tel. 03/436 61 41, Telex 24 24 686
Representatives in:
Australia, Austria, Brazil, Canada, Corea, Denmark, Finland, France, Greece, India, Israel, Netherlands, Singapore, South Africa, South America, Spain, Sweden, Taiwan, USA

contraves