LS DRIVE

LS700

0.2KW~75KW

LS700 Series *Sensorless*

Flux Vector Drive

Comply with...

- Environmentally-friendly technology
- Power-saving technology
- Innovative technology

CE Approval

3 operational control modes

- Sine wave V/F vector control
- Sine wave V/F sensorless vector control
- Flux vector sensorless control and sensorless speed PI adjustment

Built-in special practical functions

- Auto-Tuning parameter of motors with precision
  (1) can automatically detect the motor electricity parameters dynamic and static or Manual key-in motor electricity parameter value
  (2) The drives can perform auto-tuning with load
- Speed accuracy(±1%)
- Multi-function PID block
- Special PID function for pumping application
- 8 preset speeds control、8 groups of accel/decel time
- Built-in intelligent multi-functional parameter group specialized for water pump
- S ramp, linear ramp and V/F curve are programable
- Slip and rotational torque are compensated automatically
- AVR automatic voltage regulation control

Built-in Multi-Function I/O

- 8 sets of Digital-Input can perform multi-function application
- 1 set of Digital-Output can perform multi-function application
- 1set of Relay can perform multi-function application output
- 2 sets of Analog-input (5 selection of inputs condition)
- 1 set of Analog-Output can perform multi-function application

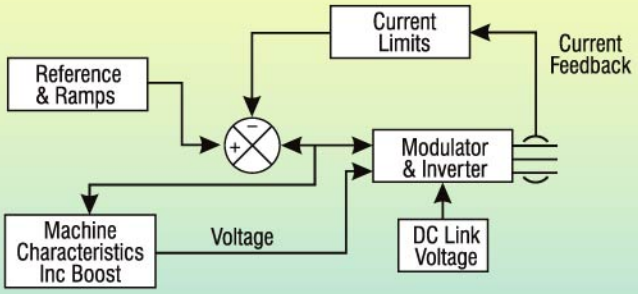

Open loop V/F vector control mode

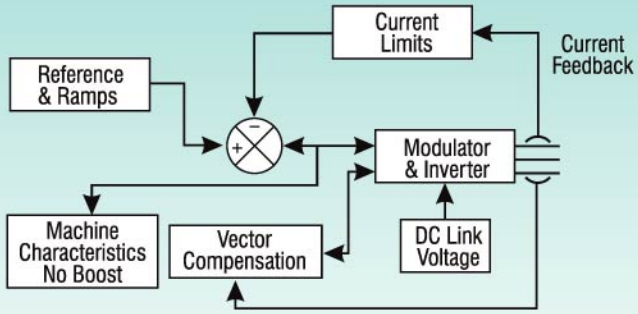

Flux vector sensorless control mode

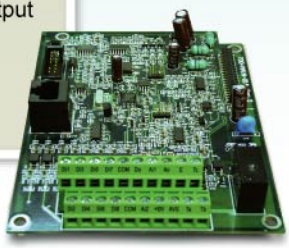

LS700 special-purpose form

- May simulate the keypad by PC, to operate the drive or to show all the parameters on the PC
- Indicate the parameter, read parameter.....etc
- May select and set the parameter by shipping way (not any by sequence)

Communication

Parameters list

Display all parameter value

Display the unit

Display the parameter name and the scope

Display the parameter value

Simulation Frequency setting

Reads the parameter

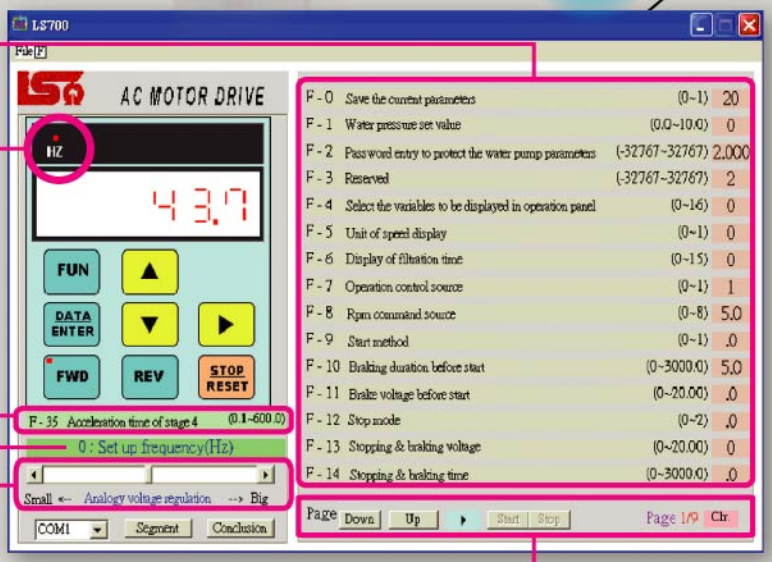

Schedule of Control Terminal Function

Terminal Mark		Designated function	Descriptions
Multifunctional D/I terminals	Di1	Forward rotation command	Di1-COM ON for forward, and OFF for stop
	Di2	Reverse rotation command	Di2-COM ON for reverse, and OFF for stop
	Di3	Input at external failure (NC)	External fault.
	Di4	Failure reset	Di4 failure releases, reset the drive
	Di5	Multi-speed command 1	4 preset speeds by BCD code
	Di6	Multi-speed command 2	4 preset speeds by BCD code
	Di7	Inching operation	To execute inching frequency operation
	Di8	E-stop	When activated ON, ac drive stops outputting voltage immediately.
	COM	Common terminal for digital input /output	Common terminal for multifunctional D/I and D/O
Analog frequency setup	+10V	+15V power supply for encoder	Power supply outputs DC+15V (maximum current 30mA) for encoder
		+10V power supply for setting up frequency	Power supply outputs DC+10V for speed reference (maximum current 10mA)
	Note 1 To output +10V or +15V is determined by the J4 setting; +10V is default output set at ex-factory.		
	AVG	0V	0V for AI and AO
	Ai1	Analog voltage frequency reference	Input impedance 30kΩ at input voltage DC 0~10V/or input impedance 500Ω at input current DC 0~20mA is determined by the J3 command selected from the voltage or current signal.
	Ai2	Analog voltage frequency reference	Input impedance 30kΩ at input voltage DC 0~10V
Multifunction D/O terminals	AO	Analog output	Multifunctional analog output (DC 0~10V)
	DO	AI Speed	This contact will be enabled 'ON' status when output frequency of ac drive reaches the frequency setting (F62).
	Note 2 It can only have one choice, either AO or DO, as a synchronous setting output made by software and hardware J1. Software AO is to be established by parameters F50 ~ F52 while software DO is to be set up by parameter F62.		
	COM	Common terminal for signal input/output	Common terminal for signals from multifunctional input/output terminals.
	Ta	Output at failure (NC)	The relay will be enabled when the drive trip
	Tb		* Ta-Tc is closed when drive trip
	Tc		* Tb-Tc circuit is opened when drive trip
	E	Terminal for grounding	Ground terminal

Control Circuit Wiring Diagram

Terminal wiring for control circuit of ac drive

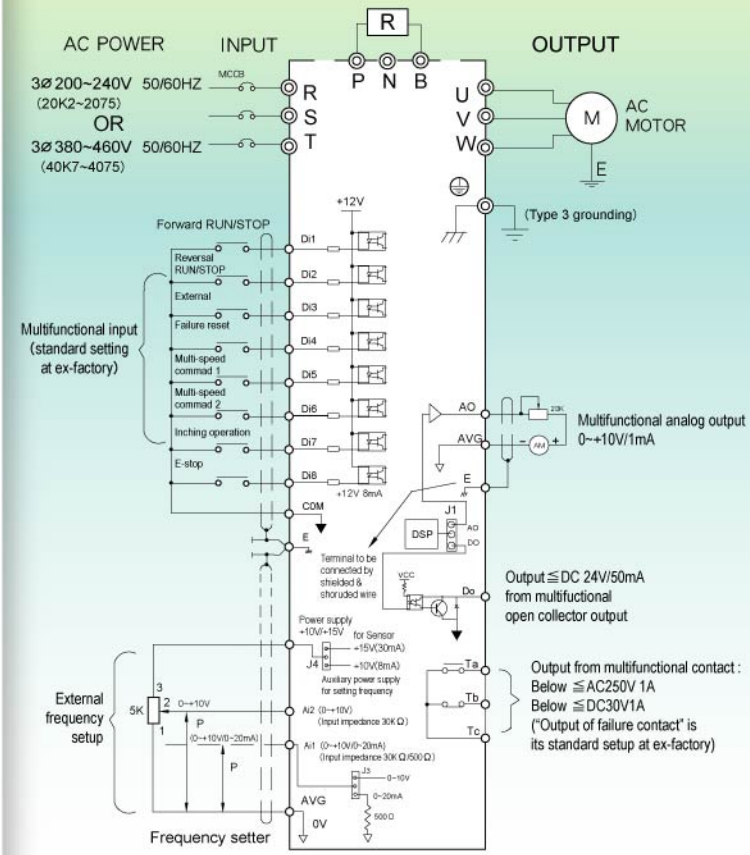

LS700M-20K2-TN
LS700M-20K4-TN
LS700M-20K7-TN
LS700M-21K5-TN

LS700-20K4-TD
LS700-20K7-TD
LS700-21K5-TD
LS700-22K2-TD

LS700-40K4-TD
LS700-40K7-TD
LS700-41K5-TD
LS700-42K2-TD

LS700-22K2-TD
LS700-24K0-TD

LS700-42K2-TD
LS700-44K0-TD

LS700-25K5-TD
LS700-27K5-TD
LS700-2011-TD

LS700-45K5-TD
LS700-47K5-TD
LS700-4011-TD

LS700-2015-TN **LS700**-2018-TN
LS700-2022-TN **LS700**-2030-TN

LS700-2037-TN **LS700**-2045-TN
LS700-2055-TN **LS700**-2075-TN

LS700-4015-TN **LS700**-4018-TN
LS700-4022-TN **LS700**-4030-TN

LS700-4037-TN **LS700**-4045-TN
LS700-4055-TN **LS700**-4075-TN

Model Instructions

LS700 Series
Flux Vector Drive
Sensorless

LS700 − 24K0 − XXXX

- LS700: LS ac drive family code
  - LS700 — Standard
  - LS700M — miniature
- 24: Voltage class
  - 2 = 200~240V
  - 4 = 380~460V
- K0: Max. suitable electric motor
  - 0K7 = 0.75KW, 1K5 = 1.5KW
  - 2K2 = 2.2KW, 4K0 = 4.0KW
- X: Blank or N : Customer-contracted product type not applicable; Alphabetic designation Designation to classify customer's drivers types of products
- X: Blank or N : Not Customer-contracted product; Alphabetic designation Customer-contracted product
- X: N : Without dynamic brake unit; D : built-in dynamic brake circuit
- X: S : Single phase; T : Three phases; X : input 110V, output 220V; Z : input 110V, output 110V

Standard Specifications

200V Series

LS700 Model	20K2	20K4	20K7	21K5	22K2	24K0	25K5	27K5	2011	2015	2018	2022	2030	2037	2045	2055	2075
Max Motor (KW) for Drive	0.2	0.4	0.75	1.5	2.2	4.0	5.5	7.5	11	15	18.5	22	30	37	45	55	75
Output Capacity (KVA) of Drive	0.6	1.0	1.7	2.8	4.2	6.0	9.1	12.2	17.5	23	29	34.7	44	55	67	82	110
Rated Current (A) of Drive	1.6	2.5	4.5	7.5	11	17.5	24	33	46	61	76	90	115	145	175	215	300

400V Series

LS700 Model	40K7	41K5	42K2	44K0	45K5	47K5	4011	4015	4018	4022	4030	4037	4045	4055	4075
Max Motor (KW) for Drive	0.75	1.5	2.2	4.0	5.5	7.5	11	15	18.5	22	30	37	45	55	75
Output Capacity (KVA) of Drive	2.0	3.2	4.2	7.0	9.5	13	18	23.5	29	33	46	53	68	84	110
Rated Current (A) of Drive	3.2	4.5	7.0	9.0	12	17	23	30	38	43	58	70	85	110	150

	Ltem	200V Rating	400V Rating
Power Source	Power Voltage, Frequency	Single-phase / Three phase 200V-240V 50 / 60Hz	Three phase 380V-460V 50 / 60Hz
	Allow Voltage Variance	±10%	
	Allow Frequency Variance	±5%	
	Max. Output Voltage	Three phase corresponds to Input voltage	Three phase corresponds to Input voltage
	Rated Output Frequency	0.01Hz~240Hz	
Control Characteristics	Control Model	Sine wave SVPWM, carrier frequency 2K~16KHz adjustable, choose one of 3 control modes : V/F, V/F sensorless, flux vector sensorless	
	Starting Torque	150% / 1Hz	
	Range of Speed Control	1 : 100	
	Precision of Speed Control	±1%	
	Control Function	15 indications, 9 command sources of rotation speed, speed searching, torque limits, multi-function input and output terminal, 8 preset speeds control, skip frequency, AVR, Auto-Tuning motor parameters, s curve, slip compensation, torque compensation, MAX and Min frequency setting, DC brake in start/stop, PID function, Water pump special-purpose PID, intelligent water pump Application function	
	Frequency Precision (Temperature Variation)	Digital signal : ±0.1% (-10℃~+40℃)	Analog signal : ±0.1% (25℃±10℃)
	Frequency Setting Resolution	Digital signal : 0.01%Hz (0.01~240Hz)	Analog signal : 0.06 / 60Hz
	Frequency Output Resolution	0.01Hz	
	Overload Capacity	Rated current 150%, 1 Min.	
	Analog Setting Signal	DC 0~10V, 0~20mA	
	Speed Acc/Dec	0.1 sec~600sec, adjustments are individually distributed to 8 speeds	
	Torque for Braking	About 20%, up to 125% with braking unit	
Protection Function	Motor Protection	$I^2 \cdot t$ electrical thermo protection	
	Instantaneous Over Current	When over 200%rated current drive trip, motor stops	
	Overload	About 150% rated output current,1 Min, Drive trip	
	Over Voltage	DC voltage in main circuit about 400V, motor stops	DC voltage in main circuit about 800V, motor stops
	Low Voltage	DC voltage in main circuit below 180V, motor stops	DC voltage in main circuit below 3800V, motor stops
	Power Protection	Input phase loss (equipped above 5.5 KW), output phase loss protection (equipped above 0.4KW)	
	Ventilation Over-heat	Protected, by thermo-switch, can be read and monitored	
	Stall Prevention	In speed Acc/Dec, stall prevention during operation	
	Ground Protection	Electrical circuit protection	
	Charging Indicating	DC voltage in main circuit over 50V, charging light is "on"	
	Location	Indoor, no corrosive and free from dust	
Environment	Ambient Temp	-10℃~+40℃(closed and wall mounted type), -10℃~45℃(open type), no freezing	
	Storage Temp (Note 2)	-20℃~+60℃	
	Humidity	Below 90% RH (no condensing)	
	Vibration	1G below 20Hz, 0.2G during 20~50Hz	

(Note 1) Max. applicable capacity of motor is based on 4-pole motor.

(Note 2) If storage temperature is too high, it might destroy the capacitor in main circuit.

■ Dimension UNIT : mm

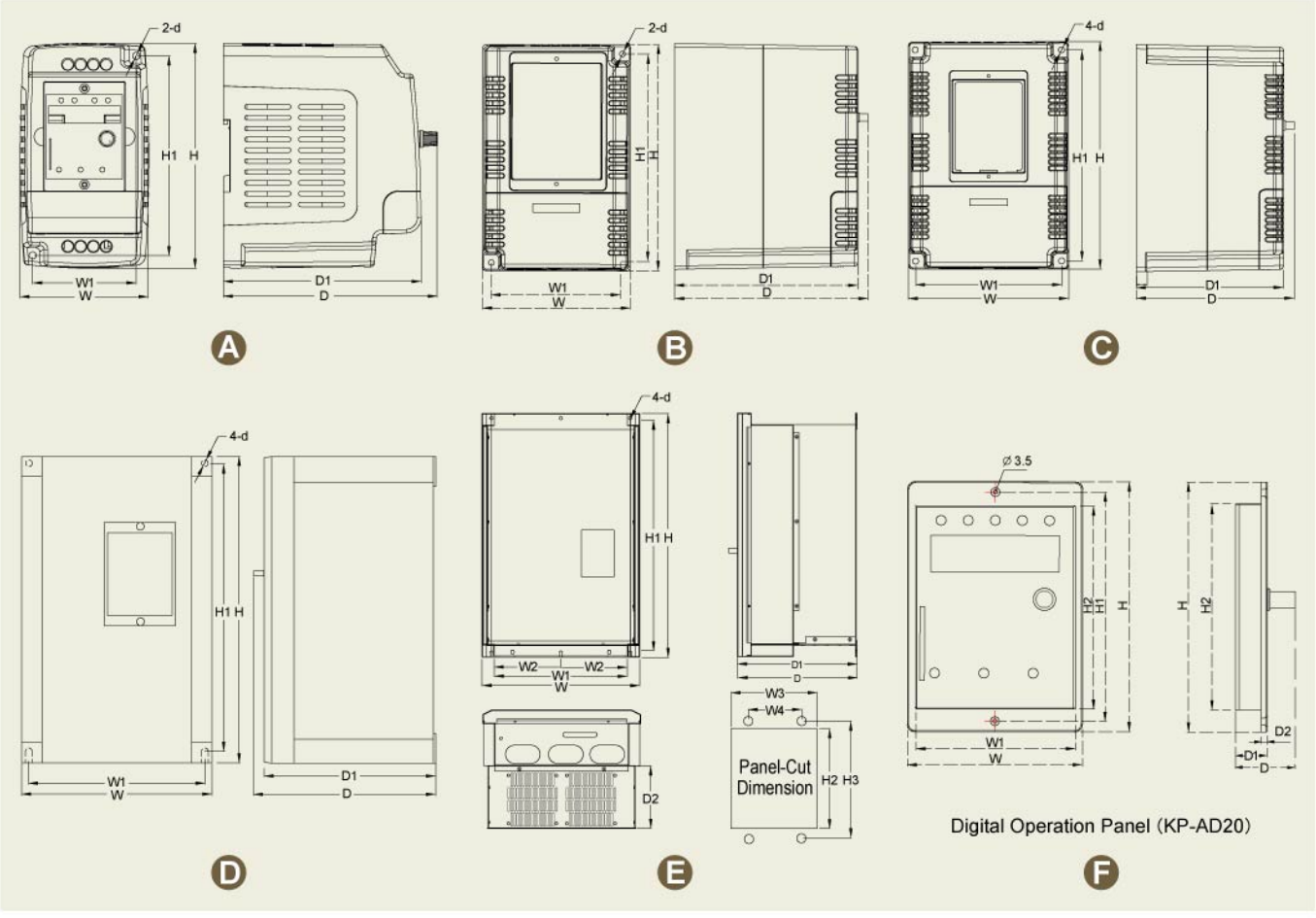

■ LS700 Specification Dimensional Drawing

Model	Dimensions (mm)			Fixed size (mm)				Ø	Semi-embedded Opens the hole • Fixed size (mm)					Figure No
	W	H	D	W1	W2	H1	D1	d	W3	W4	H2	H3	D2	
LS700M-20K2，LS700M-20K4	82.5	145	138	66.5	–	128.5	127.5	4.6	–	–	–	–	–	A
LS700M-20K7，LS700M-21K5	Traditional carriage bolt or Din Rail installment													
LS700-20K4，LS700-40K4	114	172	146	101	–	159	136	5.3	–	–	–	–	–	B
LS700-20K7，LS700-40K7														
LS700-21K5，LS700-41K5														
LS700-22K2，LS700-42K2	152	214	146	137.5	–	200	136	5.3	–	–	–	–	–	C
LS700-24K0，LS700-44K0														
LS700-25K5，LS700-45K5	188	300	180	170	–	283	170	7	–	–	–	–	–	D
LS700-27K5，LS700-47K5														
LS700-2011，LS700-4011														
LS700-2015，LS700-4015	250	420	227	218	–	401	217	7	242	170	407	422	112	E
LS700-2018，LS700-4018														
LS700-2022，LS700-4022														
LS700-2030，LS700-4030														
LS700-2037，LS700-4037	345	533	272	305	152.5	515	262		330	212	515	538	140	
LS700-2045，LS700-4045														
LS700-2055，LS700-4055														
LS700-2075，LS700-4075														
KP-AD 20	70.9	102	25.8	–	–	93	15.8	3.5	65.3	–	84.5	–	–	F

LONG SHENQ ELECTRONIC CO., LTD.
(Shulin Industrial Park)
NO. 12-2, WULIN STREET, SHULIN CITY, TAIPEI COUNTY, TAIWAN.
Tel : +886-2-26842888 (REP.) Fax : +886-2-26842889, 26842886
http://www.acinverter.com.tw E-mail: lse@acinverter.com.tw